YINGJIAO®

YDC100 SERIES 100W



Yingjiao's AC/DC DIN rail type security power are designed with slim plastic housing and for full range AC input from 90V AC to 264V AC, and supplies 13.8VDC and 27.6VDC at output, respectively.They have high efficiency and operate in wide temperature range.
In addition to the key protection features such as overload protection, over voltage protection, battery low cut off, and battery reverse polarity protection (by fuse). the alarm signal for AC OK and battery low signaling is provided, via TTL open collector output for the standard model (via relay contact output as the optional model), to facilitate the system design.

Features

- Universal AC Input/ Full Range
- Cooling by free air convection
- High operating temperature up to 70 ℃
- Higher Efficiency
- Protection:Short Circuit/Overload/ Over Voltage
- Three Years Warranty

YINGJIAO®

Model Information

Yingjiao Part Number	DC Voltage CH1/CH2	Rated Current CH1/CH2	Rated Power	CURRENT RANGE	VOLTAGE ADJ.RANGE
YDC100-13.8	13.8V	4.5A/2.5A	96.6W	0~7A	12~15V
YDC100-27.6	27.6V	2.25A/1.25A	96.6W	0~3.5A	24-30V

Input

VOLTAGE RANGE	90-264VAC/127-370VDC	
	[DC input operation possible by connecting AC/L(+), AC/N(-)]	
FREQUENCY RANGE	47-63Hz	
EFFICIENCY(Typ.)	87%	YDC100-13.8
	89%	YDC100-27.6
AC CURRENT(Typ.)	1.8A/115VAC	
	1.1A/230VAC	
INRUSH CURRENT(Typ.)	COLD START 30A/115VAC 60A/230VAC	

Output

RIPPLE & NOSE(max.)	120mVp-p	YDC100-13.8
	240mVp-p	YDC100-27.6
VOLTAGE TOLERANCE	±1.0%	
LINE REGULATION	±0.5%	
LOAD REGULATION	±0.5%	
SETUP,RISE TIME	2400ms, 50ms/230VAC at full load	
	2400ms, 50ms/115VAC at full load	
HOLD UP TIME (Typ.)	50ms/230VAC at full load	
	10ms/115VAC at full load	

Protection

OVER LOAD	105%-150% Rated Output Power
	Protection type: Hiccup mode, recovers automatically
	after fault condition is removed.
OVER VOLTAGE	CH1:14.49~18.63V YDC100-13.8
	CH1:28.98~37.26V YDC100-27.6
	Protection type : Shut down o/p voltage, re-power on to recover
BATTERY CUT OFF	10±0.5V
	20±1V

Function

AC OK	Open collector output, CONTACT:AC OK;
	CUT OFF:AC Fail; max. rating: 30V/1A
BATTERY LOW	Open collector output, CUT OFF: Battery;
	CONTACT: Battery Low; max. rating:30V/1A
	Battery low voltage :<11V
	Battery low voltage : < 22V

Environment

WORKING TEMP.	-30 ℃ to +70 ℃ (Refer to "Derating Curve")
Working Humidity	20 ~ 90% RH Non-Condensing
STORAGE TEMP, HUMIDITY	-40℃ ~+85℃,10 ~ 95% RH non-condensing
TEMP. COEFFICIENT	± 0.03%/℃(0~50℃) on CH1 output
VIBRATION	10~ 500Hz, 2G 10min./1cycle, 60min. each along X, Y,Z axes
MTBF	1820.4K hrs min. Telcordia SR-332 (Bellcore)

SAFETY & EMC

SAFETY STANDARDS	UL62368-1, TUV BS EN/EN62368-1,
	EAC TP TC 004, AS/NZS 60950.1 approved
WITHSTAND VOLTAGE	I/P-O/P:3KVAC I/P-FG:2KVAC O/P-FG:0.5KVAC
ISOLATION RESISTANCE	I/P-O/P, I/P-FG, O/P-FG:100M Ohms/ 500VDC/25 ℃/70% RH
EMC EMISSION	Compliance to BS EN/EN55032 (CISPR32) Class B, BS EN/EN61000-3-2
EMC IMMUNITY	Compliance to BS EN/EN61000-4-2,3,4,5,6,8,11,BS EN/EN55035

Note

1.All parameters NOT specially mentioned are measured at 230VAC input, rated load and 25℃ of ambient temperature.

2. Ripple & noise are measured at 20MHz of bandwidth by using a 12" twisted pair-wire terminated with a 0.1uf & 47uf parallel capacitor.

3.Tolerance : includes set up tolerance, line regulation and load regulation.

4.Length of set up time is measured at cold first start. Turning ON/OFF the power supply may lead to increase of the set up time.

5.The power supply is considered a component which will be installed into a final equipment. The final equipment must be re-confirmed that it still meets EMC directives. For guidance on how to perform these EMC tests, please refer to "EMI testing of component power supplies."

6. Installation clearances : 40mm on top, 20mm on the bottom, 5mm on the left and right side are recommended when loaded permanently with full power. In case the adjacent device is a heat source, 15mm clearance is recommended.

7. The ambient temperature derating of 3.5C/1000m with fanless models and of 5C/1000m with fan models for operating altitude higherthan 2000m(6500ft).

Dimensions & Weight

Length:	55mm/2.16in
Width:	100mm/3.94in
Height:	92mm/3.62n
Weight:	300g

Packing

Carton Size:	54 × 24.5 x 24CM
	21.26 x 9.65 x 9.45 in
Master Carton Quantities:	50pcs/Carton

Dimensions and Installation

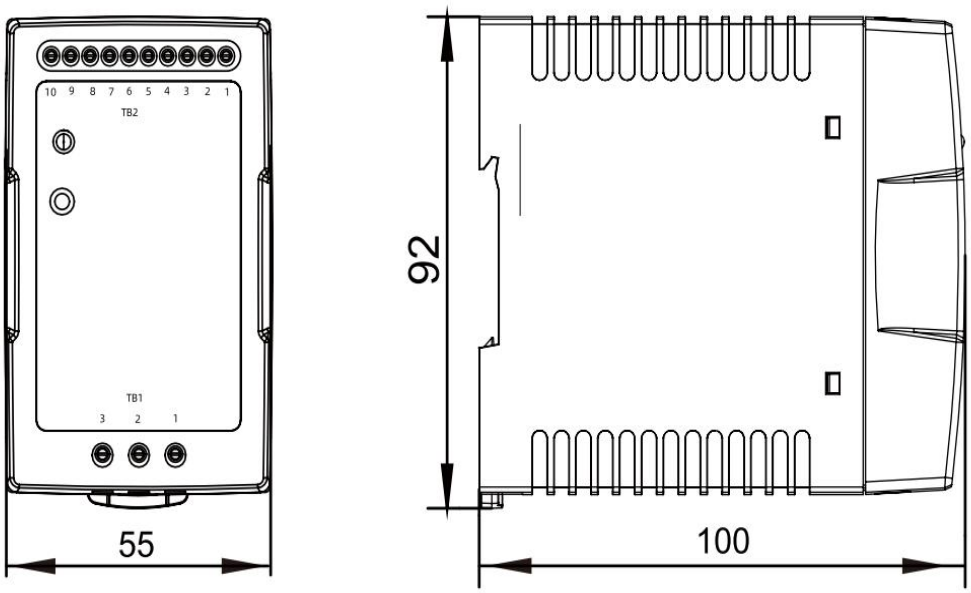

Terminal Pin No. Assignment (TB1

Pin No.	Assignment
1	AC/L or DC+
2	AC/N or DC-
3	FG ⏚

Terminal Pin No. Assignment (TB2):

Pin No.	Assignment	Pin No.	Assignment
1,2	-V	6	Bat. -
3,4	+V	7,8	AC OK
5	Bat. +	9,10	Bat. Low

Block Diagram

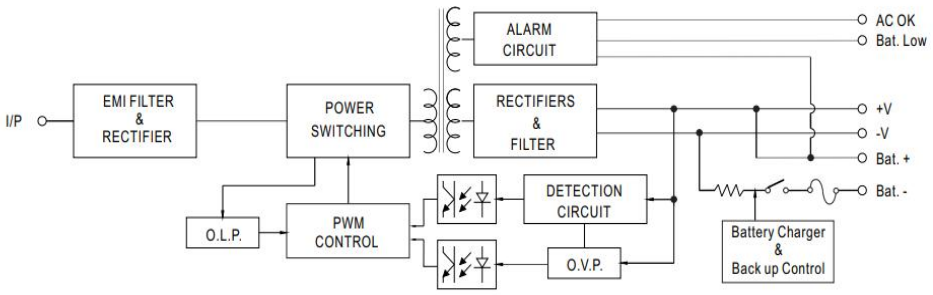

Deduction curve and temperature

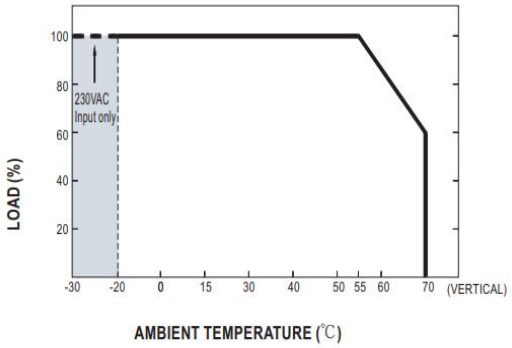

Minus output and input voltage curves

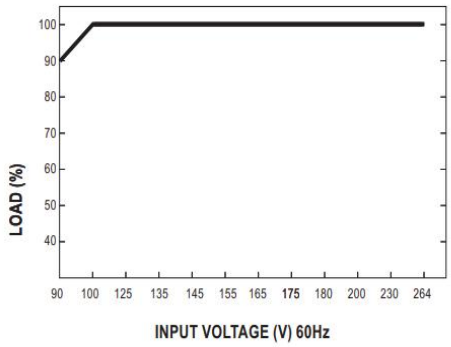

Suggested Application

2.Alarm signal for AC OK and Battery Low

(1) Please refer to Fig1.1 for suggested connection.

The power supply charges the battery and provides energy to the load at the same time when AC mains is OK. The battery starts to supply power to the load when AC mains fails.

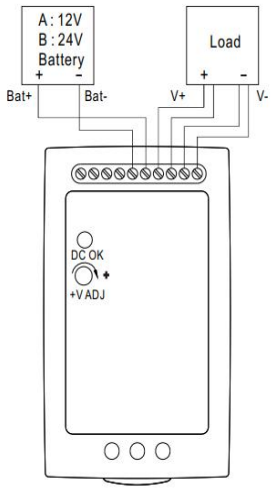

Fig 1.1 Suggested system connection

2.Alarm signal for AC OK and Battery Low

(1) Alarm Signal is sent out through "AC OK" & " Battery Low " pins via relay contact.

(2) An external voltage source is required for this function. The maximum applied voltage is 30V and the maximum sink current is 1A. Please refer to Fig 2.2.

(3) Table2.1 explains the alarm function built in the power supply

(4) AC OK signal (RL1,referring to Block Diagram) will go into hiccup mode when the overload protecton is activated.

Function	Description	Output of alarm
AC OK	The signal is "Low" when the power supply turns ON.	Low or short
	The signal turns to be "High" when the power supply turns OFF.	High or open (External applied voltage 30V max.)
Battery Low	The signal is "Low" when the voltage of battery is under A:11V, B:22V.	Low or short
	The signal is "High" when the voltage of battery is above A:11V, B:22V.	High or open (External applied voltage 30V max.)

Table 2.1 Explanation of alarm signal

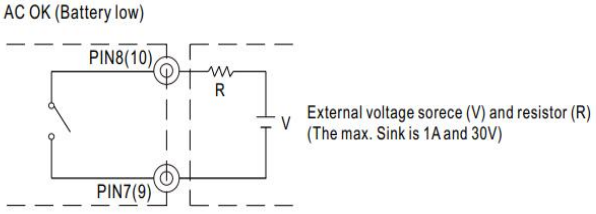

Fig 2.2 Internal circuit of AC OK (Battery Low), via relay contact